100% of Actual Size
Screen Print
Colourflex Transfer

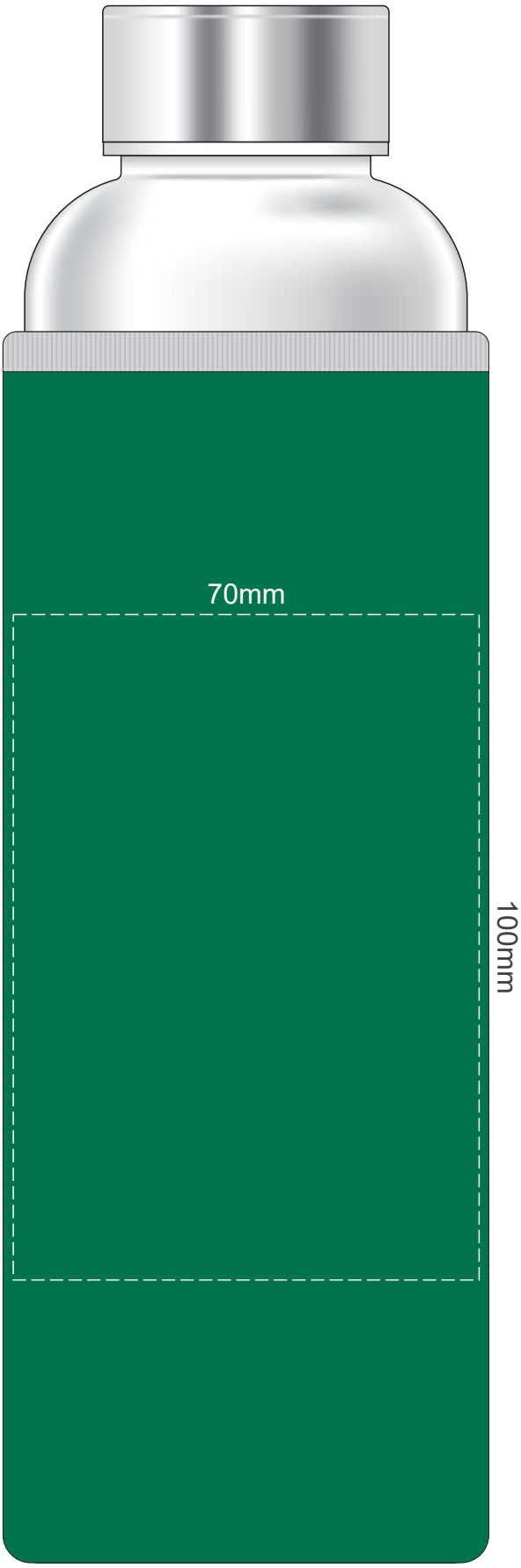

100% of Actual Size
Laser Engraving

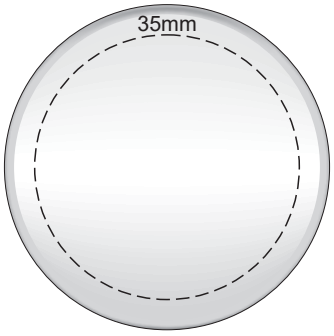

Engraves to
Stainless Steel Finish

90% of Actual Size
Pad Print (one colour)

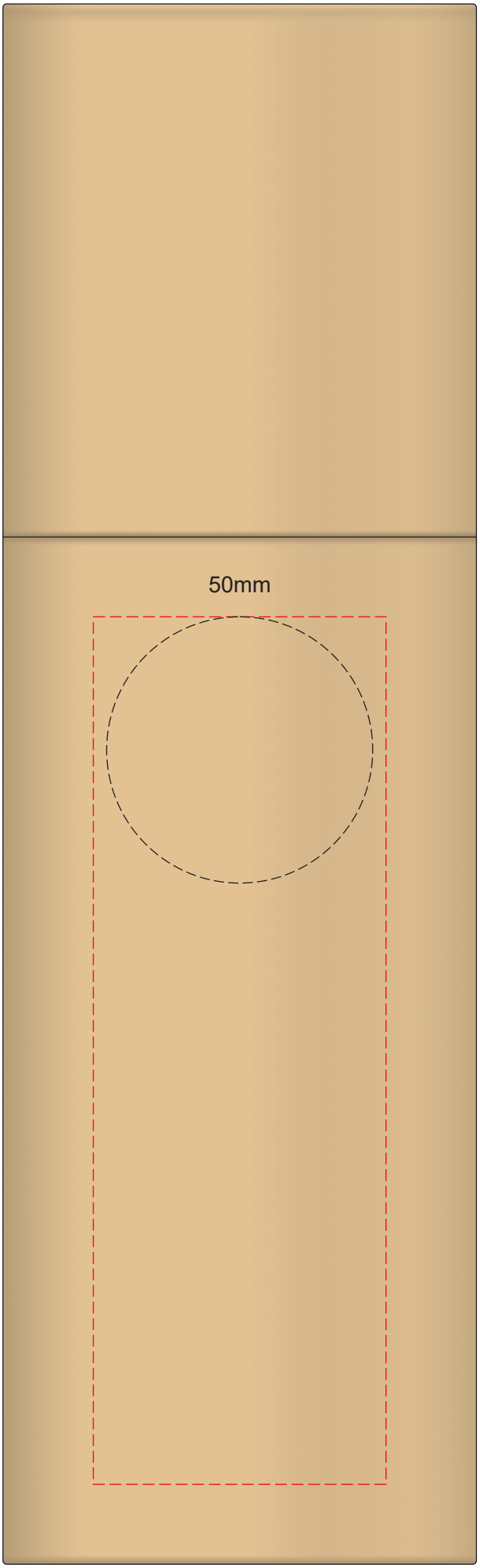

Top of Tube

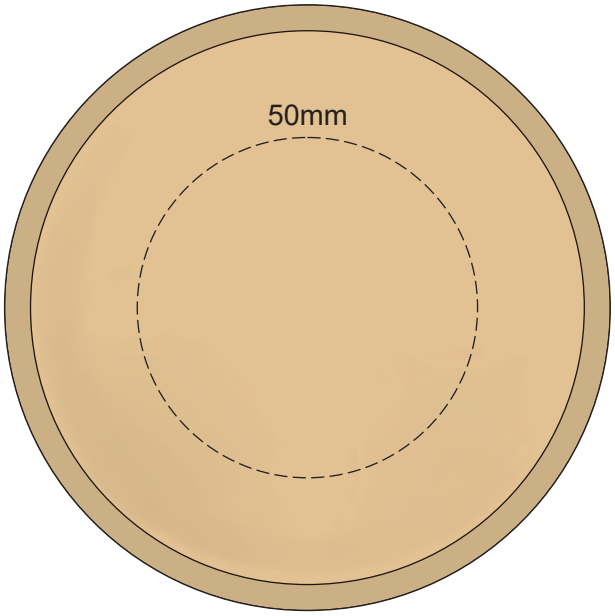

Branding area can be moved anywhere within the red line.