Pad print area at 100%
(two colour max)

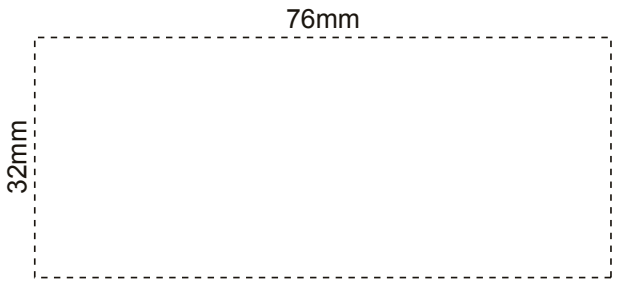
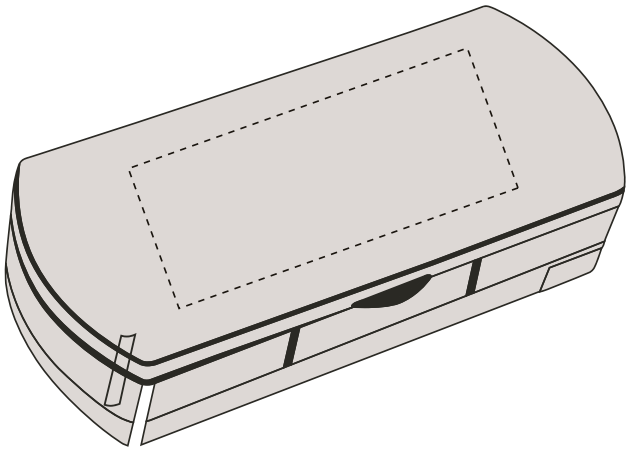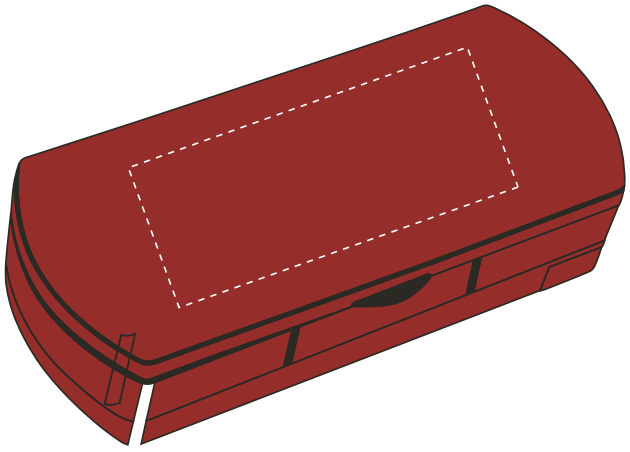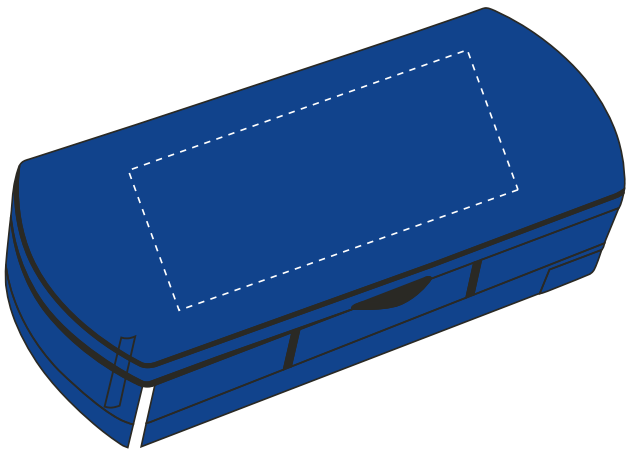
NOT ACTUAL SIZE